Implementation of an IoT based Pet Care System

Yixing Chen, Maher Elshakankiri
Department of Computer Science
University of Regina
Regina, Canada
Email: {ycf667,Maher.Elshakankiri}@uregina.ca

***Abstract*—As pet ownership is soaring each year, the demands for a higher quality of pet care products are increasing as well. This has driven the development of the Internet of Things (IoT) technology in this field. Using the technology of IoT, pet owners can remotely track their pet's activity and location, monitor their pet's health condition or even interact with their pets. All these smart pet care products are playing an indispensable role in the pet owner's daily life. In the present project, we apply the IoT technology to implement an integrated system including pet food feeder, water dispenser, and litter box, which are the three most fundamental elements that pet owners will be concerned about when they are busy or away from their pets. The three subsystems are connected to the local network with Arduino Uno boards and Wi-Fi modules. Furthermore, the data collected from each sensor are processed and displayed on a smartphone application. Thus, pet owners through only one single interface, they can obtain all the information regarding pet's food consumption, water consumption, as well as defecation timing, duration, and frequency. Additionally, a controlling function is also enabled in the application for the pet owners to dispense food anytime and anywhere. An overall statistical chart with the mentioned values is presented in the application, updating from time to time. With this pet care system in a smartphone application, we provide pet owners an efficient, convenient and low-cost tool for pet care.**

***Index Terms*—Internet of Things, smart pet care system, wireless sensor networks**

I. Introduction

With the increasing demands for life quality, the Internet has been spreading into every corner of people's daily life for decades. In recent years, thanks to the Internet of Things (IoT) technology, there has been a tremendous transition in people's lives, and we have stepped into an era when a broader range of objects are connected rather than just between computers or mobile phones. By "connecting the unconnected", IoT has made it possible to sense and control the physical world by making objects smarter and connecting them through an intelligent network [1].

The present research is an IoT-based pet care system which includes three subsystems: food feeder, water dispenser, and litter box. The purpose of this research is to apply IoT technology to combine different smart devices, facilitating pet owners with one single smartphone application for controlling the pet care products and monitoring their pet's behavior. More specifically, the collected data records pet's behavior of daily feeding, drinking, and defecation, therefore any abnormalities can be a sign of potential illness. Hence, this system can assist the pet owners and veterinarians for further health analysis in illness diagnosis or prediction.

The present paper is organized as follows: Section II studies several related works and the motivation that generates the present research. Section III presents the architecture of the pet care system. Section IV explains the implementation design from a hardware perspective. Section V explains the software implementation design. Section VI discusses the debugging and testing findings. Section VII integrates all the subsystems and presents the results. At last, Section VIII concludes the present research and proposed some improvements as future work.

II. Related Work and Motivation

In the pet care market, there have been numerous smart devices applying IoT technology to satisfy various pet care needs. By studying the smart pet care products, we find that among the food feeder, water dispenser, and litter box, the most advanced and mature applications of IoT technology is the smart pet feeder, which usually contains functions such as automatic feeding controlling, real-time monitoring, or consumption reporting [2].

Water dispenser, however, is one of the most "non-connected" devices. The OurPets [3] water fountain is one of the few drinking devices that could display the drinking frequency and duration on the smartphone. However, there is no recording of the exact water-consuming situation in the mobile application.

Regarding the smart litter box, most are designed for self-cleaning. Some of the Wi-Fi-enabled litter boxes can show the waste level and notification on the application when the drawer is full, such as Smart Kitty [4]. Very few of the litter boxes could record the defecation habits (frequency or duration) to reveal the pet's health condition, such as the Smart Scoop Intelligent Litter Box of OurPets [3] and the smart cat litter box from Sharp Corp. [5].

Besides, when we were looking for a holistic system of monitoring and controlling these three devices, we found that there was a gap in the market. For instance, some pet care applications such as Petsafe [6] only provides a food feeder application, instead of establishing an ecosystem by including their water dispensing products and litter boxes into the application. Another example is OurPets [3], it provides a smartphone application which combines their feeding, drinking

Authorized licensed use limited to: University of Wolverhampton. Downloaded on November 04,2025 at 15:51:08 UTC from IEEE Xplore. Restrictions apply.

and litter box products. However, these Bluetooth-connected devices have a limited communication range. Moreover, their Wi-Fi converter requires customers to purchase separately, which makes it costly and inconvenient.

In recent years, academic researchers have noticed the lack of holistic pet care systems in the market. The Automatic Pet Monitoring and Feeding System [7] seeks to resolve this problem by combining a smart pet door, an automatic food feeder, and a pet collar system. The Smart Pet Care System [8] contains an automatic feeder, an automatic pooping pad, and a camera. The PetCare [9] is a more recent research that the authors have developed a system with a remote activated pet door, a defecation pad, as well as a food and water dispenser.

The research above have included the feeding and defecation function in the pet care systems. However, from a more in-depth health consideration, the data recorded from these three systems are not sufficient. Therefore, it generates the purpose of the present research, which is to implement a combination of three fundamental pet care subsystems, and to record more detailed pet's health status. Hence, pet owners could get an overview of their pet's fundamental condition through a smartphone application whenever and wherever they want.

III. IoT Based Pet Care System Architecture

In this pet care system, each subsystem uses an Arduino Uno board as the central controller, as well as an ESP8266 ESP-01 Wi-Fi module which is integrated TCP/IP protocol stack and could give Arduino board access to the Wi-Fi network. Moreover, all systems are connected to the smartphone application Blynk, which is a controlling, monitoring, and statistical displaying platform on smartphones. Blynk is a platform based on iOS and Android application, it supports various modules of boards, including Arduino board. Thus, it is utilized to communicate with the mainboard Arduino and works as an interface [10]. Sensors on each subsystem device send data through their Arduino board to the home gateway (a wireless router at home) through the Internet, then the data is forwarded to the Blynk server and finally to the Blynk application on the smartphone. The actuator, on the contrary, receives the commands originally sent from the Blynk application. Figure 1 shows the block diagram of the pet care system.

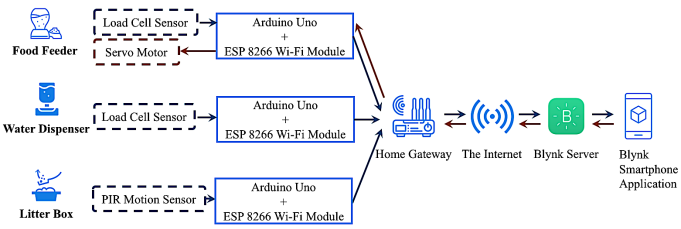

Fig. 1. The Block Diagram of Pet Care System

IV. Hardware Design

In the phase of implementation, we start with hardware design. We apply Arduino Uno as the microcontroller board and ESP8266 ESP-01 as the Wi-Fi module for the access to the Wi-Fi network. The ESP8266 module communicates with the Arduino board through hardware serial. In detail, the Wi-Fi module TX pin is located at RX pin on Arduino, and RX pin at TX pin. Since the ESP8266 module requires 3.3V power supply, a DC-DC step-down converter is to convert the voltage from 5V on Arduino to 3.3V to power this Wi-Fi module. Additionally, we enable the CH_PD pin on the ESP8266 module.

All the mentioned set-ups are applied identically for each of the three devices (food feeder, water dispenser, and litter box) as fundamental components, based on this set-up, we have added some specific sensors to realize their corresponding functions.

A. Food Feeder

The food feeder comprises remote food dispensing and food consumption monitoring functions.

The functionality of dispensing food is based on the project Smart Arduino Cat Feeder [11]. This subsystem consists of a food storage container and a pour-out-food container, a double feeding dish, and a Tower Pro SG90 Micro Servo as the actuator. The upper part (the food storage), and the bottom part (the pour-out-food container) are both cut out a 90-degree radial opening, with the center of them connected with the servo. The upper container is attached to the arm of the servo and the bottom container to the servo's main body. A sliding board is set up inside of the bottom container to ensure the food could drop from the storage and slide into the dish underneath. The following Figure 2 shows the prototype of the food feeder.

Fig. 2. The Prototype of Food Feeding Subsystem

When the servo receives a signal from the controller board, the servo arms start to rotate, driving the food storage to rotate 180 degrees. As soon as the two radial openings from two containers match, food drops from the tunnel and slides

Authorized licensed use limited to: University of Wolverhampton. Downloaded on November 04,2025 at 15:51:08 UTC from IEEE Xplore. Restrictions apply.

into the dish; then the servo arms go back to the original position where food can be blocked; as a result, the feeder stops dispensing. The 90-degree opening fits the size of the granular cat or dog food so that the food could drop gradually and not be stuck at the exit.

Regarding food consumption, we utilize a 5kg load cell force sensor to sense the weight of remaining food. The sensor is mounted between two plates which are placed at the bottom of the food dispensing subsystem to measure the weight. The schematic diagram of the connection is shown in Figure 3.

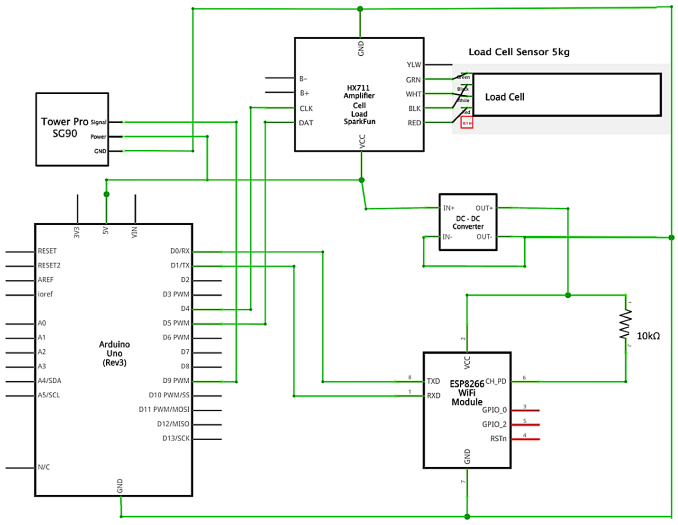

Fig. 3. The Schematic Diagram of Food Feeding Subsystem

B. Water Dispenser

The functionality of water dispenser is to measure the remaining water in the water container. A gravity-based water dispenser is utilized and placed on top of the load cell sensor. The prototype is shown in Figure 4.

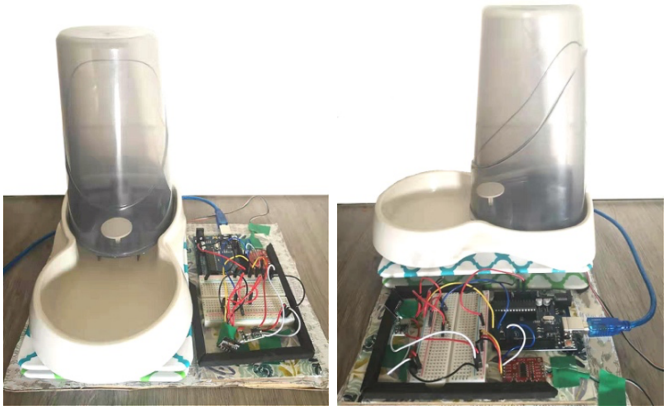

Fig. 4. The Prototype of Water Dispensing Subsystem

Therefore, besides the same settings of micro-controller and the Wi-Fi module, the water dispenser subsystem contains the same load cell module as the feeding subsystem, as well as the settings: a 5kg load cell force sensor is used to sense the weight of remaining water amount, and it is mounted between two plates which are placed at the bottom of the water dispenser. The schematic diagram is shown in Figure 5.

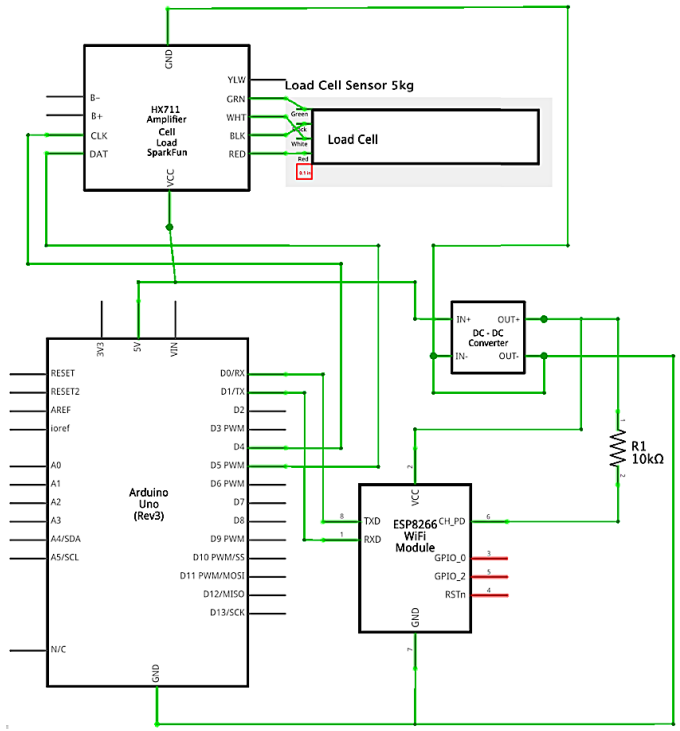

Fig. 5. The Schematic Diagram of Water Dispensing Subsystem

C. Litter Box

The litter box is a subsystem to measure the frequency of pet defecation, and the timing and duration of the last time when the pet is inside.

Besides Arduino Uno board and ESP8266 module, we place an HC-SR501 PIR motion sensor above the litter box (the litter box in this project is an open litter box, in case of an enclosed one, the sensor can be installed at the entrance) to sense the motion when the pet comes in. The HC-SR501 PIR motion sensor is an adjustable sensor with delay time, range and trigger mode adjustment: we set the delay time to the lowest (about three seconds); the range to the lowest (approximately three meters); and the trigger mode to repeated mode. Figure 6 shows the prototype of the litter box subsystem.

The settings of the Wi-Fi module are the same as the previous two subsystems. Additionally, the motion sensor signal pin is located at Arduino D9 PWM pin. The schematic diagram of the connection is shown in Figure 7.

V. Software Design

The software development proceeds on the Arduino IDE platform. The commands of all three subsystems are programmed via this Arduino software into Arduino Uno board.

On the other side, the Blynk application is the interface of all the subsystems. By selecting the widgets with particular

Authorized licensed use limited to: University of Wolverhampton. Downloaded on November 04,2025 at 15:51:08 UTC from IEEE Xplore. Restrictions apply.

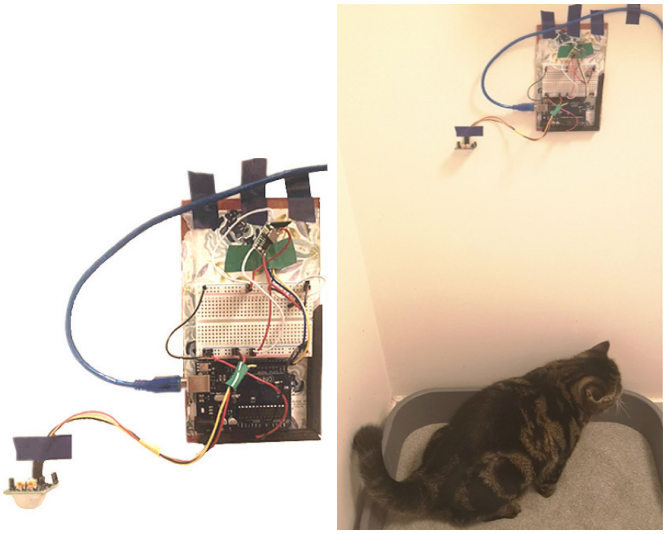

Fig. 6. The Prototype of Litter Box Subsystem

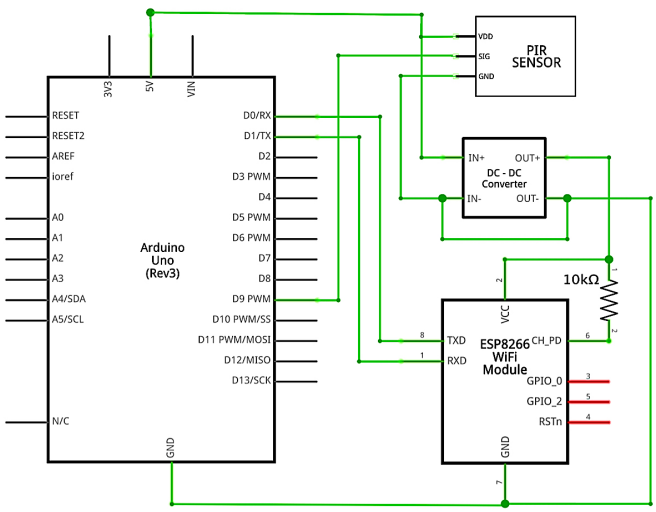

Fig. 7. The Schematic Diagram of Litter Box Subsystem

functions provided by Blynk, we can control or monitor the projects over the Internet. In order to integrate all the devices into one project, a unique authentication token will be sent for each of the devices when we add new devices into the Blynk project. This also ensures the security of the entire system. By adding the unique token into the code of the corresponding device, Blynk can identify the device and then communicate with it.

Arduino communicates with Blynk application with the virtual pins from Blynk, which are the channels for sending data. Virtual pins are commonly used to interface with other libraries (Servo, LCD, and others) and implement custom logic [12]. On the Blynk application, when we choose a widget, we indicate the virtual pin to let the application execute the corresponding commands. More details are presented as following.

A. Food Feeder

The software design of the food feeder includes servo rotating, reading of load cell and weight calculation, connection to the network, and communication with Blynk.

First of all, we set an original position for the servo. When we press the button widget on the Blynk application, the virtual pin 3 (V3) in the button changes status, the servo starts to rotate from zero degrees to 180 degrees in steps of one degree; when it reaches to 180 degrees, the servo then rotates 180 degrees backward until reaches the original position. If we keep pressing the button, the servo will proceed with this loop continuously. In this way, each time tapping the button drops the same amount of food, which we call it one portion. Then we can control the food amount accordingly.

Regarding the weight measurement, we firstly calibrate the scale in order to ensure accuracy. Afterward, we add a value-display widget in Blynk then set the virtual pin. We assume that when the devices are launched, the food feeder has been loaded with food, therefore, we set the initial weight as zero, any food consumed is a decreasing of the weight. So the weight multiplied by minus one is displayed as food consumption on the application.

To let all devices connected to the same project in Blynk, we utilize the feeder's authentication token which is acquired when the Blynk project is created. At the set-up phase, we synchronize the baud rate of the Arduino board and ESP8266 module to 9600bps. When the subsystem is connected to the network, feeder status is displayed as "online" in the application.

B. Water Dispenser

The logic of water dispenser is identical to the weight measurement part of food feeder. When connected to the network, the water dispenser is displayed as "online", as well as the water consumption value is updated.

C. Litter Box

The network connection method of the litter box is the same as the previous two devices. Besides, the PIR motion sensor requires a specific configuration. On the application, the displayed values regarding the litter box are three: when is the last time of leaving the litter box, the duration of the last defecation, and the total frequency.

The HC-SR501 motion sensor outputs a high impulse when senses movement, and a low impulse when the movement stops. Hence, we record the time when there is an impulse change from low to high, which indicates a movement is started; in other words, the pet has entered the litter box. When the impulse changes from high to low and the low state lasts for more than two minutes (we assume that every time the pet enters the litter box, will stay still for less than two minutes before leaving), then this change timing is recorded as the movement ending time. We add a Blynk widget of RTC to read and record the real-time. Details on the operation logic are shown in the following flowchart Figure 8.

Authorized licensed use limited to: University of Wolverhampton. Downloaded on November 04,2025 at 15:51:08 UTC from IEEE Xplore. Restrictions apply.

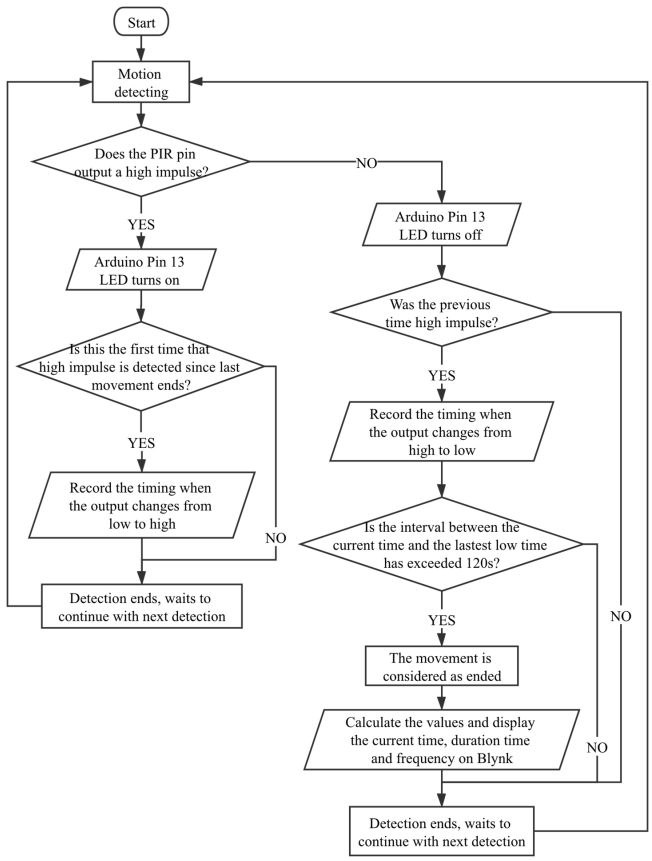

Fig. 8. The Flowchart of Litter Box Subsystem

VI. Debugging and Testing

In the section of debugging and testing, we focus on the behavior and performance of the three individual subsystems. There were two critical issues during the testing:

In the initial design, when testing the food feeder, the moment we powered on the food feeder, the servo motor started to rotate instantly then vibrated constantly, even though there was no command sent from the application. Moreover, the weight measurement also gave unstable readings, and this happened the same on the water dispenser. After investigation and debugging, we found out that this was because the Wi-Fi module and Arduino board communicated via software serial and caused the crosstalk between the software serial pins, and generated unexpected impulses. By changing the connection from software serial to hardware serial, we solved the crosstalk of pins, as well as stabilized the performance of the servo motor and the weight readings.

Another unexpected issue was the frequent failing of network connection with an average failure rate of up to 80%. This occurred because the Arduino Uno board and ESP8266 module could not establish a stable connection. In order to connect the Arduino board and Wi-Fi module, handshake requests should be received from one to the other once we power-on the system. However, if the waiting time exceeds a specific time, the connection fails. Therefore, in the initial design, considering the Arduino board and Wi-Fi module had different power voltage requirements (5V and 3.3V), we used two separate power supplies. However, by plugging in the two power supplies manually, we could not guarantee that the two components would be powered-on precisely at the same time.

During the debugging, we considered connecting the Wi-Fi module to a 3.3V power supply on the Arduino board. Nevertheless, after several rounds of testing, the 3.3V power from the Arduino board was turned out to be insufficient to maintain a stable operation of the Wi-Fi module (at least need 300mA).

By inserting a converter into the circuit, we utilized only one power supply. Therefore, the converter converts voltage from 5V to 3.3V for the Wi-Fi module so that the two components could be powered stably at the same time and initiate synchronized handshake requests. Hence, the connection was established between two components, and the performance was improved (testing result is presented in Table I).

Furthermore, we also conducted individual tests of the three subsystems:

A. Food Feeder

The testing of food feeder consists of two parts: remote control performance and weight measurement accuracy.

The performance of food dispensing function is measured by pressing the button and recording the rate of successful execution. The procedure consists of five rounds, and each round we press the button ten times. The result is presented in Table I.

TABLE I
Test Result of Food Feeder Control Function

	Succeed times	Failed times	Success Rate
1	10	0	100%
2	10	0	100%
3	10	0	100%
4	9	1	90%
5	9	1	90%

As shown in the result, we got twice execution failure caused by the network disconnection, which was a significant improvement compared with the initial design discussed above.

Weight measurement is tested by measuring the actual weight of food consumed and compared with the displayed value in the application. We achieved an average accuracy rate of 99.3%, the details are recorded in Table II.

B. Water Dispenser

Similar to the weight measurement of food consumption, we compared the actual consumed water with the displayed value, the accuracy rate is the same as the food feeder 99.3%.

C. Litter Box

In order to test the litter box, we recorded ten times of a cat's defecation including the exact time when it left the litter

Authorized licensed use limited to: University of Wolverhampton. Downloaded on November 04,2025 at 15:51:08 UTC from IEEE Xplore. Restrictions apply.

TABLE II
TEST RESULT OF FOOD FEEDER WEIGHT MEASUREMENT

	Actual Weight (g)	Displayed Value (g)	Accuracy Rate
1	137	140	97.8%
2	107	109	98.1%
3	117	118	99.1%
4	93	93	100.0%
5	51	51	100.0%
6	140	141	99.3%
7	96	97	99.0%
8	393	396	99.2%
9	113	113	100.0%
10	64	64	100.0%

box and the duration of each time. The testing result is shown in Table III.

TABLE III
TEST RESULT OF LITTER BOX

	Time of Leaving			Duration (s)		
	Actual	*Displayed*	*Difference*	*Actual*	*Displayed*	*Difference*
1	16:26	16:27	0:01	138	142	4
2	18:56	18:58	0:02	87	91	4
3	13:33	13:35	0:02	39	38	1
4	17:00	17:01	0:01	74	80	6
5	18:10	18:12	0:02	117	119	2
6	23:02	23:03	0:01	92	93	1
7	8:27	8:29	0:02	29	32	3
8	9:31	9:33	0:02	58	55	3
9	11:06	11:08	0:02	66	71	5
10	12:51	12:53	0:02	183	178	5

The average time difference is close to two minutes (0:017), and the duration difference is 3.4 seconds.

From the testing results of the three individual subsystems, we can conclude that despite the minor error rate, the three devices work as expected.

VII. SYSTEM INTEGRATION AND RESULTS

In order to implement a holistic system, besides the displayed values and a command button, we add a statistical chart by using the SuperChart widget in Blynk. The food consumption value from the feeder, water consumption value from the water dispenser, the duration of each defecation are all presented in the same chart and updated in real-time.

The interface of the pet care system is shown in Figure 9. The first part presents the information on the food feeder. "Food consumption" module displays how many grams have been consumed since the last time powered on. The button "Feeding Time!" is an instant food dispensing button. Once pressed, the food dispenser will start to rotate and dispense food.

The second part shows how much water has been consumed since the last time the subsystem is powered on.

The third part is to update the litter box data. "Last time" module shows when is the last time the pet leaves the litter box, and how many seconds the pet stays in the litter box. "Total times" counts the total frequency of the pet has left the litter box since the last time this subsystem is powered on.

The last part illustrates the statistics in the last 24 hours with three types of graphs. The x-axis represents time, and the y-axis represents different values from the three subsystems. The area graph indicates the amount of food consumption (y-axis) corresponds to time (x-axis). Meanwhile, the line graph shows water consumption (y-axis) and time (x-axis). The bar chart represents when the pet leaves the litter box and how long the pet stays in the litter box each time. The higher the bar is, the longer the pet has been in the litter box. At the bottom of the chart, different time scales can be selected so that pet owners can check the information for real-time, the last 15 minutes, the last one hour, or the last 24 hours.

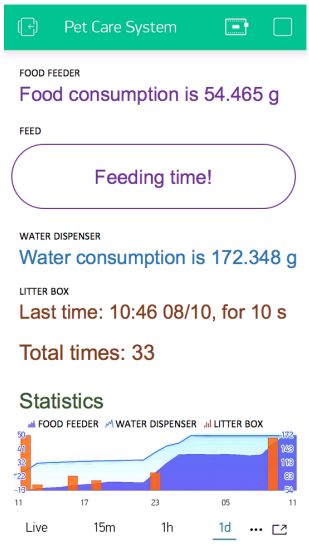

Fig. 9. The Interface of Pet Care System

The statistical chart in Figure 9 can be full-screen displayed, as shown in Figure 10, where all three graphs are more explicitly presented. From the chart, we can observe information such as the pet comes to drink water in the midday and consumes food and water at around nine o'clock in the evening, then, more food in the next morning. Besides, the pet has been in the litter box six times during the last 24 hours, and the two highest bars possibly indicate twice defecation, and the other shorter bars indicate urination.

VIII. CONCLUSION AND FUTURE WORK

To conclude, the present project implements an IoT-based pet care system applying several sensors and actuators on three devices (food feeder, water dispenser, and litter box). The food feeder subsystem contains functions such as instant and remote food dispensing and food consumption monitoring. The water dispenser can monitor water consumption. The litter box records the frequency and timing of the pet goes to the toilet. To combine the three subsystems, we use an interface in a smartphone to control and monitor the devices as well as display the statistical records.

Authorized licensed use limited to: University of Wolverhampton. Downloaded on November 04,2025 at 15:51:08 UTC from IEEE Xplore. Restrictions apply.

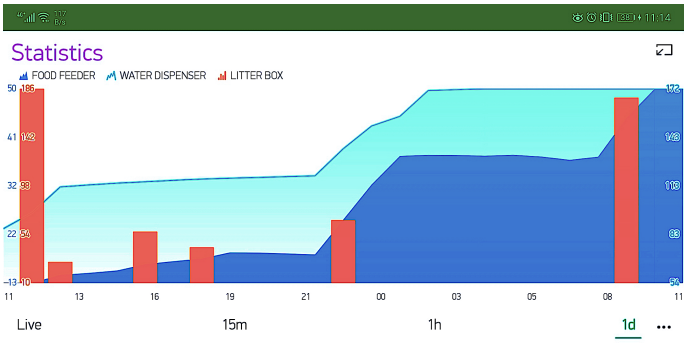

Fig. 10. The Statistical Chart of Pet Care System

We have proposed some improvements based on the present paper. Firstly, as there have already been several mature smart feeders in the market, more features can be implemented on the food feeder, such as scheduled feeding. Secondly, in case any unexpected behavior occurs on the food feeder or the water dispenser, such as food stuck at the exit, or food or water spilled out, we need an alarm mechanism to notify pet owners timely. Thirdly, regarding the statistical chart, we can utilize data analysis tools and apply big-data technology to further format and analyze the data. Thus, any abnormality of pet's behavior can be detected and notified to the pet owners and a health analysis result can be generated periodically. Furthermore, we can enhance the performance by improving the stability of the system connection, the durability of device modules, and the accuracy of the data. Last but not least, as there are multiple previous products and works on pet care from other perspectives such as smart cage, smart toy, wearable devices, and even smart home, we can dedicate to connect more devices to enrich and enhance the pet care system and fulfill more demands coming from pet owners.

REFERENCES

[1] L. Hiebert, "Public Safety Blog Series – Connecting the Unconnected is Smart Law Enforcement", Cisco Blogs, 2013. [Online]. Available: https://blogs.cisco.com/government/public-safety-blog-series-connecting-the-unconnected-is-smart-law-enforcement. [Accessed: Sep. 09, 2019].

[2] G. Parker, "Top 10 Automatic Pet Feeders of 2019", Wiki.ezvid.com, 2018. [Online]. Available: https://wiki.ezvid.com/best-automatic-pet-feeders. [Accessed: Sep. 09, 2019].

[3] Ourpets.com. [Online]. Available: http://ourpets.com/. [Accessed: Sep. 09, 2019].

[4] Smartkitty.co.uk. [Online]. Available: http://smartkitty.co.uk/. [Accessed: Sep. 09, 2019].

[5] "This litter box can spot your kitty's health issues", Cbsnews.com, 2018. [Online]. Available: https://www.cbsnews.com/news/this-litter-box-can-spot-your-kittys-health-issues/. [Accessed: Sep. 09, 2019].

[6] Petsafe.net. [Online]. Available: https://www.petsafe.net/. [Accessed: Sep. 09, 2019].

[7] S.Subaashri, M.Sowndarya, D.K.S. Sowmiyalaxmi, S.V.Sivassan and C. Rajasekaran, "Automatic Pet Monitoring and Feeding System Using IoT", International Journal of ChemTech Research, vol. 10, no. 14, pp. 253-258, 2017.

[8] S. Kim, "Smart Pet Care System using Internet of Things", International Journal of Smart Home, vol. 10, no. 3, pp. 211-218, 2016.

[9] A. Luayon, G. Tolentino, V. Almazan, P. Pascual and M. Samonte, "PetCare: A Smart Pet Care IoT Mobile Application", in IC4E 2019: 2019 10th International Conference on E-Education, E-Business, E-Management and E-Learning, Tokyo, 2019, pp. 427–431.

[10] Blynk.io. [Online]. Available: https://blynk.io/. [Accessed: Sep. 09, 2019].

[11] A. Ulitin, "How to Build a Smart Arduino Cat Feeder", Youtube.com, 2017. [Online]. Available: https://www.youtube.com/watch?v=dqr-AT5HvyM. [Accessed: Sep. 08, 2019].

[12] "Virtual pins control", Blink Intro. [Online]. Available: https://docs.blynk.cc/#blynk-firmware-virtual-pins-control. [Accessed: Sep. 09, 2019].

Authorized licensed use limited to: University of Wolverhampton. Downloaded on November 04,2025 at 15:51:08 UTC from IEEE Xplore. Restrictions apply.